NOTES:
1. CABINET SHALL BE RATED TYPE 3R WITH SHED ROOF
2. CONSTRUCTED OF 14 GA GALV STEEL WITH SS HINGES
3. NO FACTORY KNOCKOUTS
4. FRENCH GASKETED HORIZONTAL DOORS
5. EQUIPPED WITH 3 PT CATCH NON KEYED PADLOCKABLE HANDLE

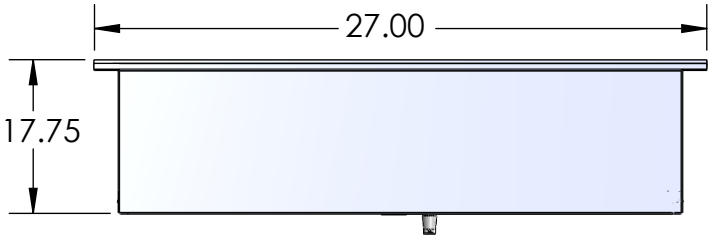

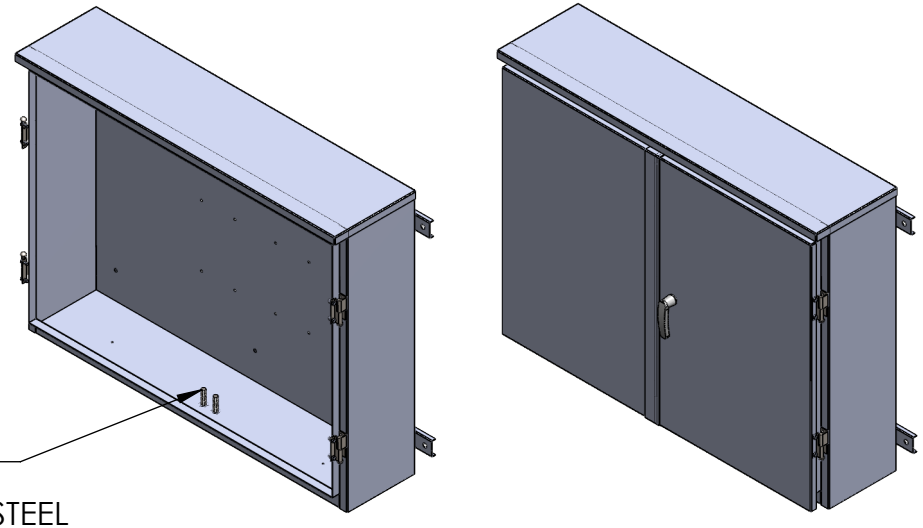

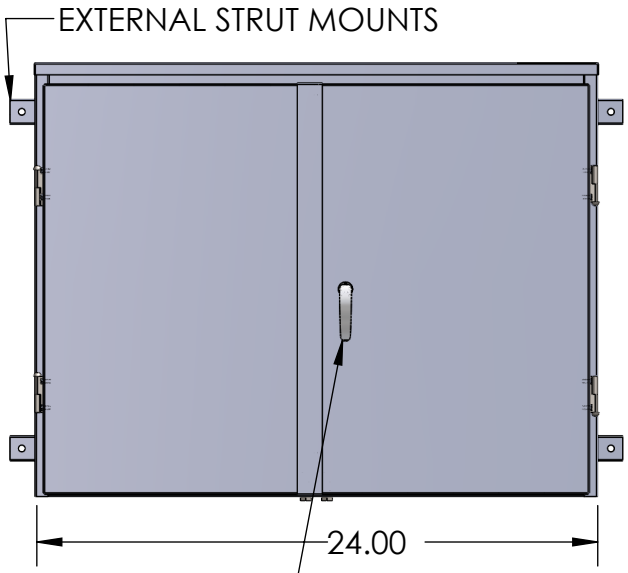

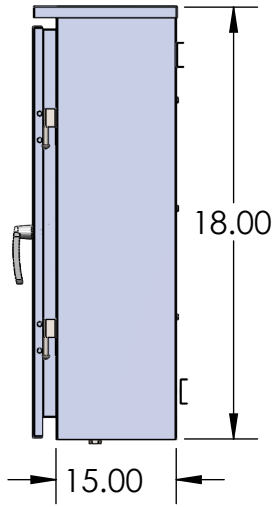

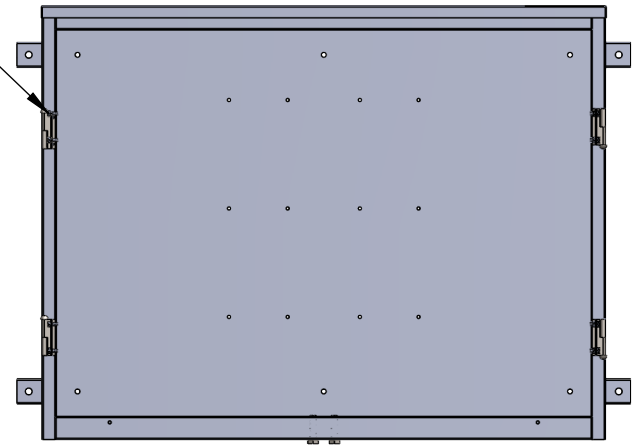

	NAME	DATE
DRAWN BY	J. Pincus	10/29/2024
APPROVED BY		

PROPRIETARY AND CONFIDENTIAL
THE INFORMATION CONTAINED IN THIS DRAWING IS THE SOLE PROPERTY OF Nav-Tech Inc. ANY REPRODUCTION IN PART OR AS A WHOLE WITHOUT THE WRITTEN PERMISSION OF Nav-Tech Inc. IS PROHIBITED.

NAV-TECH INCORPORATED
155 MARCUS BLVD
HAUPPAUGE, NEW YORK 11788
PH: (718) 257-2111 FAX: (718) 257-2626

UNLESS OTHERWISE SPECIFIED:
ALL DIMENSIONS ARE NOMINAL UNLESS EXPLICITY SPECIFIED OTHERWISE

MAT'L: 14 GA GALV STEEL
FINISH: ANSI 61 POWDER COAT
WEIGHT:

UNLESS OTHERWISE SPECIFIED
1. REMOVE ALL BURRS AND BREAK ALL SHARP EDGES .015 X 45° OR .015R
2. DIMENSIONAL LIMITS APPLY AFTER PLATING
3. 125 MACHINED SURFACES EXCEPT AS NOTED

DRAWING TITLE: UNFURNISHED CT CABINET
PART #: ENC-CTR-241815-FD
DESCRIPTION: FRENCH DOOR NEMA 3R UNFURNISHED CT CABINET WITH PADLOCKABLE HANDLE AND LIFT OFF HINGES

DO NOT SCALE DRAWING | SCALE: 1:12 | SIZE A | SHEET 1 OF 1 | REV. 0